CCR Number: 001	CRITICALITY: ROUTINE	DUE:12/10/97

DISTRIBUTION SHEET

EO-1 LEVEL II CCB

Chuck Zakrzwski/GSFC PPT Lead

Mark Perry/EO-1 S/C Systems Engineer

Brain Smith/EO-1 Spacecraft Engineer

Mike Kelly/EO-1 Flight Assurance Manager

Jeff Woytach/NASA/LeRc EO-1 PPT Lead

Paul Sanneman/EO-1 ACS Lead

George Andrew/EO-1 Systems Avionics Engineer

Bill Hayden/GSFC MAM IPDT Lead

Matt Jurotich/EO-1 Payload Manager

Pete Spidaliere/EO-1 Mission Systems Engineer

NEW MILLENNIUM PROJECT CONFIGURATION CHANGE REQUEST

PROGRAM EO-1

CCR NO. 0001

DATE INITIATED 11/26/97

TITLE Baseline EO-1 Pulsed Plasma Thruster (PPT) ICD-019

ORIGINATOR Swales Aerospace

ORIGINATOR'S CHG. NO. SAI-019

SPONSOR/CODE M. Jurotich/EO-1 Payload Mgr **PHONE** x5919

EFFECTIVITY

ITEM: PPT

S / N

ITEM:

S / N

ITEM:

S / N

CHANGE CLASS

	I	II
PRELIMINARY	☐	☐
FORMAL	☐	☐

TYPE OF CHANGE

MILESTONE	☐	INTERFACE	☒	SOFTWARE	☐
DOCUMENT	☒	POWER	☐	OTHER	☐
COST	☐	WEIGHT	☐		☐

DOCUMENTS OR SOFTWARE AFFECTED

SAI-ICD-019

PROBLEM

The attached draft version of SAI-ICD-019, Earth Orbiter -1 (EO-1) Pulsed Plasma Thruster (PPT) Interface Control Document (ICD) requires baselining. The document defines the interfaces of the PPT to EO-1 spacecraft, as well as the flight and ground functional, physical, environmental and operating characteristics.. This ICDserves as the controlling technical document between the PPT and the EO-1 spacecraft.

PROPOSED SOLUTION

Baseline the attached draft version of SAI-ICD-019, EO-1 PPT ICD, by the EO-1 Level II Configuration Control Board (CCB). The baseline issue will be formally release after CCB approval. Future changes will be initiated by submittal of Configuration Change Requests (CCRs) and Preliminary Interface Revision Notices (PIRNs) for CCB approval. This document is maintained by the EO-1 Configuration Management Office (CMO).

BOARD ACTION

APPROVE	☐
APPROVE WITH CHANGE	☐
DISAPPROVE	☐
WITHDRAW	☐

APPROVAL LEVEL REQUIRED

LEVEL I HQS	☐
LEVEL II GSFC	☒
LEVEL III	☐

CRITICALITY LEVEL

EMERGENCY	☐
URGENT	☐
ROUTINE	☒

PROCUREMENT CHANGE ORDER CLASSIFICATION

ROUTINE		URGENT		EMERGENCY	☐
OPTION 1	☐	OPTION 1	☐		
OPTION 2	☐	OPTION 2	☐		

COMMENTS

CHAIRPERSON _____ **DATE** _____

3/28/96

CONTRACT NO.: NAS5-32650
TASK NO.: 2103-347
SAI-ICD-019

EO-1 Pulsed Plasma Thruster (PPT) Interface Control Document (ICD)

SAI-ICD-019

AUGUST 19, 1997

REVISION -

Prepared by:
SWALES AEROSPACE
5050 Powder Mill Road
Beltsville, MD 20705

TABLE OF CONTENTS

1.0 SCOPE 7
2.0 DOCUMENTS 7
2.1 APPLICABLE DOCUMENTS 7
2.2 REFERENCE DOCUMENTS 7
3.0 INTERFACE REQUIREMENTS 7
3.1 INTERFACE DEFINITION 7
3.1.1 INTERFACE FUNCTIONS 8
3.1.1.1 Spacecraft Interface Functions 8
3.1.1.2 PPT Interface Functions 8
3.2 MECHANICAL/THERMAL INTERFACE REQUIREMENTS 8
3.2.1 CONFIGURATION 8
3.2.1.1 Coordinate Systems 9
3.2.1.2 PPT Orientation 10
3.2.1.3 Fields of View 11
3.2.1.4 Alignment with the Center of Mass 11
3.2.1.5 Mounting Interface 11
3.2.1.5.1 Flatness Specification 11
3.2.1.5.2 IN-PLANE ACCURACY 11
3.2.2 MASS PROPERTIES 12
3.2.2.1 Mass 12
3.2.2.2 Center Of Gravity 12
3.2.2.3 Moment Of Inertia 12
3.2.3 MECHANICAL DESIGN and ANALYSIS REQUIREMENTS 12
3.2.3.1 Limit Load Factors 12
3.2.3.2 Structural Stiffness Requirement 12
3.2.3.3 Stress Analysis Requirement 12
3.2.3.4 Fastener Capacity 13
3.2.3.5 Random Vibration 13
3.2.4 ALIGNMENT 13
3.2.5 PPT HANDLING OPERATIONS 13
3.2.6 ACCESS REQUIREMENTS 13
3.2.7 THERMAL 14
3.2.7.1 Thermal Interface 14
3.2.7.2 Thermal Isolators 15

3.2.7.3 Design Responsibility 15
3.3 ELECTRICAL INTERFACE 15
3.3.1 POWER REQUIREMENTS 15
3.3.1.1 Description 15
3.3.1.2 Power Characteristics 16
3.3.1.2.1 Transients, Ripples and Spike Performance, Output Impedance 16
3.3.1.3 PPT Load Characteristics 16
3.3.1.3.1 Power Distribution 16
3.3.1.3.2 Nominal Operation Profile 17
3.3.1.3.2 PPT Turn-On Transients 17
3.3.1.3.3 Turn-Off Transients, Operational Transients, and Reflected Ripple and Spikes .. 17
3.3.2 COMMAND REQUIREMENTS 17
3.3.2.1 Capacitor Charge 18
3.3.2.2 Spark Plug Discharge 18
3.3.3 TELEMETRY REQUIREMENTS 18
3.3.3.1 Voltage Telemetry 18
3.3.3.2 Temperature Sensors 18
3.3.3.3 Fuel Gauges 18
3.3.4 CONNECTORS, PIN ASSIGNMENTS and WIRE LIST 18
3.3.4.1 Connectors 18
3.3.4.2 Connector Mounting 19
3.3.4.3 Pin Assignment/Wiring List 19
3.3.5 ELECTROMAGNETIC COMPATIBILITY 19
3.3.5.1 EMC Requirements 19
3.3.5.1.1 Conducted Emissions 19
3.3.5.1.2 Conducted Susceptibility 20
3.3.5.1.3 Radiated Emissions 20
3.3.5.1.4 Radiated Susceptibility 20
3.3.5.1.4.1 Electric Field 20
3.3.5.1.4.2 Magnetic Field 20
3.3.5.2 Shielding 20
3.3.5.3 Isolation 20
3.3.6 MECHANICAL 20
3.4 ENVIRONMENTAL REQUIREMENTS 21
3.4.1 RADIATION 21
3.4.2 SAFETY 21

3.4.3 CONTAMINATION 21
3.5 SOFTWARE INTERFACES 21
3.5.1 TELEMETRY REQUIREMENTS 21
3.5.2 GROUND COMMANDS 22
3.5.3 ACS 22
4.0 GSE 22
5.0 DELIVERABLES LIST 22
6.0 PPT PERFORMANCE 23
6.1 IMPULSE BITS 23
6.2 THRUST VECTOR 23
6.3 OPERATIONAL CONSTRAINTS 24
6.4 TOTAL IMPULSE 24

1.0 SCOPE

This Interface Control Document (ICD) defines the interfaces of the Pulsed Plasma Thruster (PPT) to the Earth Orbiter-1 (EO-1) Spacecraft, as well as the (flight and ground) functional, physical, environmental, and operating characteristics and other requirements to meet the objectives of the experiment. This is the controlling interface document between the PPT and the EO-1 spacecraft; therefore, the information contained herein supersedes in the event of conflicts with other documents.

This ICD will serve as the controlling technical document between the PPT and the EO-1 Spacecraft. The document is controlled by the Goddard Space Flight Center (GSFC) EO-1 project office.

2.0 DOCUMENTS

The following documents of the exact issue shown form a part of the ICD to the extent specified herein. In the event of conflict between this ICD and the document referenced herein, the contents of this ICD shall be considered a superseding requirement.

2.1 APPLICABLE DOCUMENTS

SAI-PLAN-130	EO-1 Integration and Test Plan
SAI-PLAN-138	E0-1 Contamination Control Plan
SAI-SPEC-158	EO-1 Verification Plan and Environmental Specification
AM-149-0020(155)	System Level Electrical Requirements NMP EO-1 Flight, Litton Amecom
AM-149-0030(155)	EO-1 Command Specification, Litton Amecom
AM-149-0031(155)	EO-1 Telemetry Specification, Litton Amecom
TBD	PPT Users Manual
TBD	Mission Assurance Requirements
A0759	PPT to Spacecraft Interface Control Drawing

2.2 REFERENCE DOCUMENTS

GSFC-PPL	GSFC Preferred Parts List (Latest issue)
MIL-M-3810	General Specification for Microcircuits
MIL-S-19500	General Specification for Semiconductors
MIL-STD-1547	Electronic Parts, Materials, and Processes for Space and Launch Vehicles
MIL-STD-975	Standard (EEE) Parts List
MIL-STD-202	Test Methods for Electronic and Electrical Components
MIL-STD-883	Test Methods and Procedures for Microelectronics

3.0 INTERFACE REQUIREMENTS

3.1 INTERFACE DEFINITION

The PPT is a single module electromagnetic propulsion system which utilizes Teflon as a propellant. For EO-1, one PPT module with two thrust producing electrode/fuel bar assemblies will be mounted to the spacecraft with thrust vectors parallel to the spacecraft Z-axis. The PPT will produce positive or negative pitch torque by selectively discharging through one of the two electrode pairs. The PPT experiment will use only the PPT to control in the spacecraft the pitch axis, torquer bar and the pitch momentum wheel pitch commanding will be disabled. The spacecraft will provide power, commands, mounting surface and fasteners, control software, harnessing, and interface electronics for the PPT. The PPT will provide telemetry to the spacecraft, a mounting interface to the spacecraft, and will incorporate a thermal control design to maintain the PPT temperature.

3.1.1 INTERFACE FUNCTIONS

The functions provided to the PPT by the Spacecraft, and conversely, are delineated in the following paragraphs.

3.1.1.1 Spacecraft Interface Functions

The following major interface functions shall be provided by the spacecraft.

a. Provision of Primary Power from the 28 VDC power bus to the PPT
b. Provision of three discrete digital CMOS driven TTL command lines from the spacecraft to the PPT
c. Provision of a dedicated power line for survival heaters
d. Provision of three analog telemetry lines to monitor voltages in the PPT
e. Provision of two analog telemetry lines to monitor PPT temperatures
f. Provision of two analog telemetry lines to monitor fuel gauges
g. Provision of mounting surface, inserts, thermal isolators, and fasteners
h. Provision of internal spacecraft harnesses for all PPT command and telemetry signals
i. Provision of mounting location for two external bulkhead connectors which will electrical connect the PPT harnesses to the internal spacecraft harnesses
j. Provision of software necessary for PPT operation and experiment

3.1.1.2 PPT Interface Functions

a. Transmission of seven analog telemetry signals from the PPT to the spacecraft
b. Provision for mounting the PPT as defined in drawing A0759
c. Provision of harnesses for all PPT command and telemetry signals from PPT unit to two bulk head connectors on external spacecraft surface
d. Provision of PPT and spacecraft bulkhead connectors, connector savers, and connector caps
e. Provision of break-out box for PPT to spacecraft bulkhead connection
f. Provision of non-flight electrode shorting plugs

3.2 MECHANICAL/THERMAL INTERFACE REQUIREMENTS

The PPT experiment consists of a single unit. The PPT is mounted on the exterior of the spacecraft Bay 6 equipment panel. Threaded inserts shall be supplied by the spacecraft contractor, on the exterior of the panel, for mounting the PPT at the locations specified in drawing A0759. The PPT unit shall be configured such that removal from the spacecraft is possible after it is installed on the spacecraft.

3.2.1 CONFIGURATION

The configuration of the PPT on the Bay 6 equipment panel is shown in Figure 3.1.

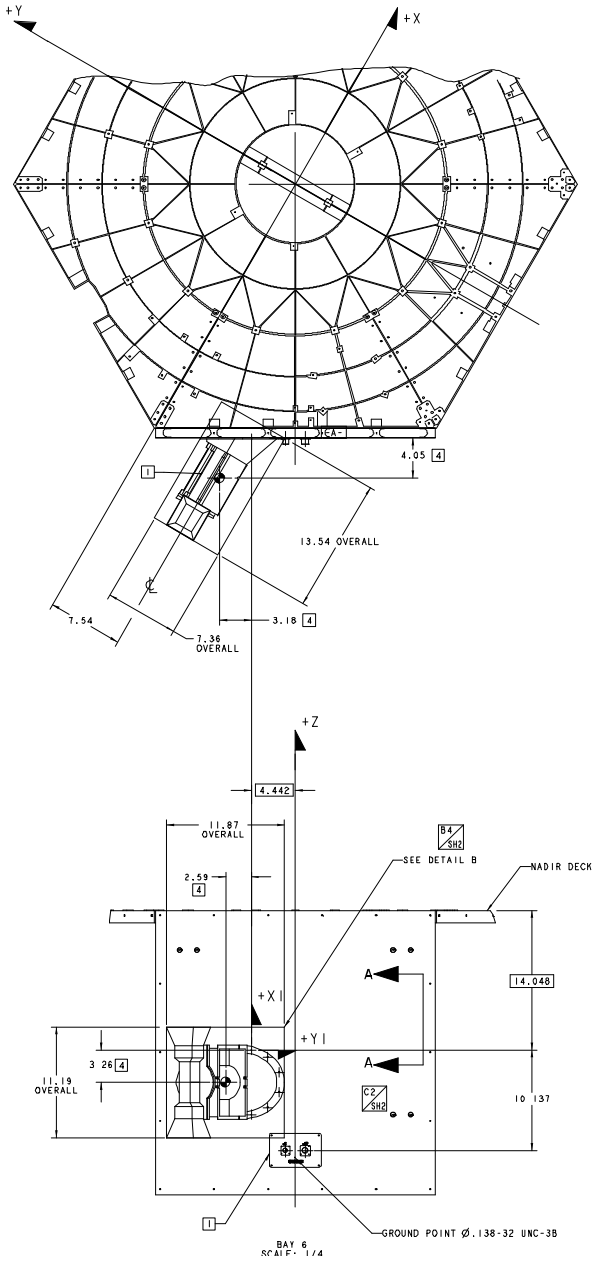

Figure 3.1 **Configuration of the PPT** (from Drawing A0759)

3.2.1.1 Coordinate Systems

Orthogonal reference axes are established for the EO-1 spacecraft and the PPT. The PPT coordinate system is shown in drawing A0759. The EO-1 coordinate system is shown in Figure 3.2.

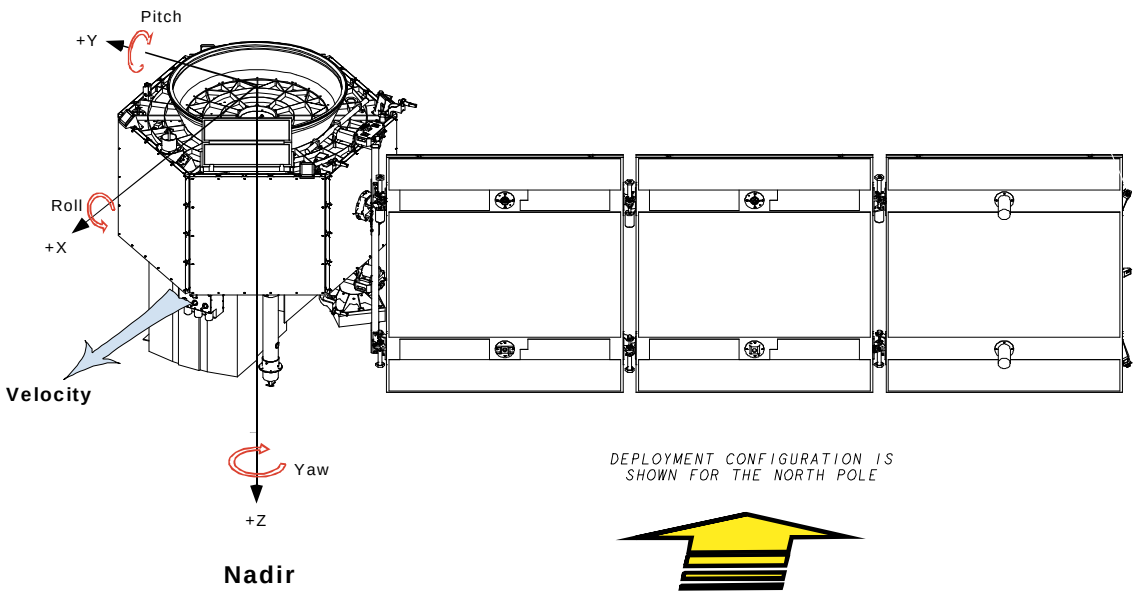

Figure 3.2 **Deployed Spacecraft w/Coordinate System** (sun is normal to the page)

3.2.1.2 PPT Orientation

The PPT is orientation such that the spark plug # 1 electrode side is in the +Z spacecraft axis direction as shown in Figure 3.3.

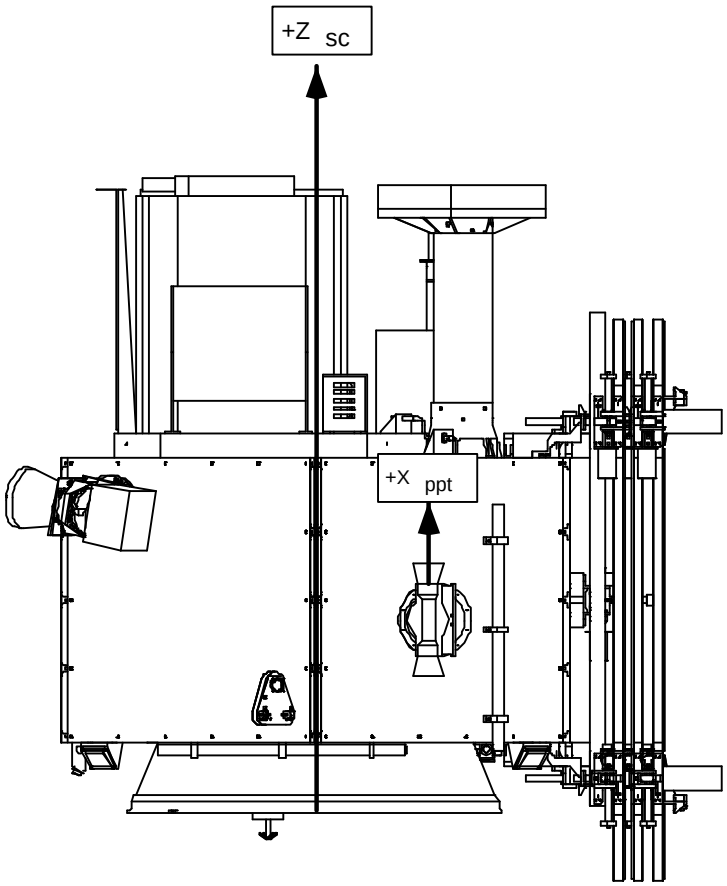

Figure 3.3 **Electrode Orientation Drawing**

3.2.1.3 Fields of View

The PPT shall be located on the spacecraft such that a 10° half-angle cone clear field of view is maintained for both thrust nozzles. A 40 Deg. half angle cone clear field of view is desired for each thrust nozzle and is shown in Figure 3.4.

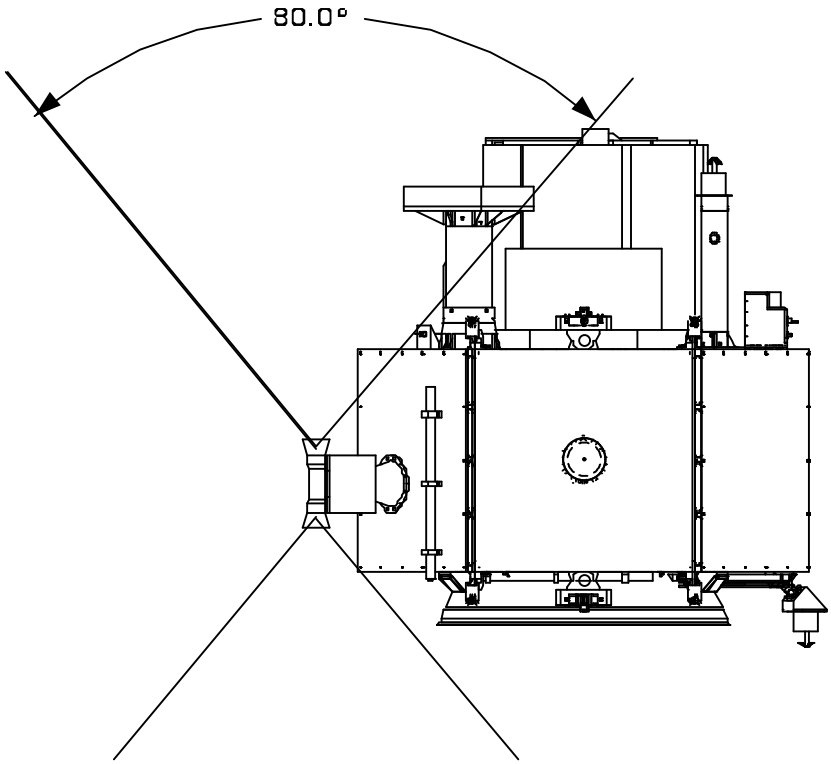

PPT Plume Cone +/- 40 degrees
(Spacecraft Solar Array Removed for Clarity)

Figure 3.4 PPT Field of View Drawing

3.2.1.4 Alignment with the Center of Mass

The PPT will be located on the spacecraft such that the Z component of the PPT thrust vectors are located within 20 cm in the spacecraft Y direction of the spacecraft beginning and end of life center mass.

3.2.1.5 Mounting Interface

The PPT unit will mount directly to the spacecraft with twelve threaded fasteners and inserts to be supplied by the spacecraft. G10 thermal isolators will be used at the mounting surface shall be provided by the spacecraft. The mounting pattern and thermal isolators are shown on drawing A0759.

3.2.1.5.1 Flatness Specification

Neither side of the mechanical interface plane shall be out of plane more than 0.25mm.

3.2.1.5.2 IN-PLANE ACCURACY

The mounting point centerlines shall not change more than 0.25mm from nominal.

3.2.2 MASS PROPERTIES

Table 3.1 delineates the mass, dimensions, center of gravity (CG), the PPT unit.

Table 3.1 Mass Properties

Mass	NTE 6 kg
Dimensions	The dimensions of the PPT shall conform drawing A0736.
Center of Gravity	The center of gravity of the PPT unit with respect to the c.g. location shown in drawing A0736 is ± 2.54 cm in each axis.

3.2.2.1 Mass

The total weight of the PPT shall not exceed 6 kg. All changes in mass estimates, including expected growth, shall be reported promptly. The final PPT mass shall be measured to an accuracy of ± 0.1 kg.

3.2.2.2 Center Of Gravity

The final PPT cg shall be calculated to +/- 2.54 cm (1 in.)

3.2.2.3 Moment Of Inertia

The moment of inertia of the PPT about the PPT reference axis shall be calculated with 5% accuracy.

3.2.3 MECHANICAL DESIGN and ANALYSIS REQUIREMENTS

All hardware shall be designed to survive the environments specified in the EO-1 Verification Plan and Environmental Specification, SAI-SPEC-158. All hardware shall be designed and analyzed to the applicable safety factors defined below. The analyses shall indicate a positive margin of safety. Limit loads are defined as the maximum expected flight loads.

All flight hardware except pressure vessels	Test Qual	Analysis Only
Material Yield Factors =	1.25	2.0
Material Ultimate Factors =	1.4	2.6

Ground support handling hardware
Design to a factor of safety of 5 (ultimate loads)
and test to a minimum factor of safety of 2 without
any permanent deformation occurring.

3.2.3.1 Limit Load Factors

The hardware shall be designed to withstand the quasi-static limit loads (with applicable safety factors) defined below. This load should be applied in any direction at the component center of gravity.

Limit Load
±15 g

3.2.3.2 Structural Stiffness Requirement

In the launch configuration, the PPT shall have a first mode frequency greater than 100 Hz and will verify this by analysis. A finite element model of the EO-1 Satellite will be generated to be used in the launch vehicle coupled loads analysis. To aid in this effort, the mass properties of the deliverable hardware will be required.

3.2.3.3 Stress Analysis Requirement

A stress analysis shall be performed to verify the integrity of the component structure and attachments when subjected to the specified loads with the applicable safety factors. Margins of safety shall be

determined, dominant failure modes identified and this information transmitted to the satellite integrator. Existing mechanical stress analysis reports and data may be used if applicable.

3.2.3.4 Fastener Capacity

The deliverable hardware will be attached to the spacecraft panel using threaded. A positive margin factor of safety shall be maintained for all the fasteners used on the spacecraft. The maximum load on any fastener shall not exceed 150 lbs axial and 275 lbs shear when subject to the quasi-static limit loads defined in Section 3.2.3.1.

3.2.3.5 Random Vibration

All hardware shall be designed to withstand the random vibration environment (with applicable safety factors) defined in Table 3.2.

Table 3.2 PPT Random Vibration Test Levels

Frequency (Hz)	Acceptance Levels	Protoflight Levels
20	0.006 g^2/Hz	0.011 g^2/Hz
20-100	+6 dB/octave	+6 dB/octave
100-500	0.14 g^2/Hz	0.28 g^2/Hz
500-2000	-6 dB/octave	-6 dB/octave
2000	0.009 g^2/Hz	0.018 g^2/Hz
Overall	10.64 grms	15.04 grms

Notes:
1. Levels are for each of three orthogonal axes, one of, which is normal to the mounting surface.
2. Levels to be applied at the interface with the EO-1 spacecraft.
3. Test duration is one minute per axis.
4. The table shows a flight acceptance and protoflight test levels. These levels may be reduced (notched) in specific frequency bands, with Project concurrence, if required to preclude damage resulting from unrealistic high amplification resonant response due to the shaker mechanical impedance and/or shaker/fixture resonance.
5. Flight type attach hardware (including any thermal washers, etc.) shall be used to attach the component to the test fixture, and pre-loads and fastener locking features shall be similar to the flight installation.
6. Cross-axis response of the fixture shall be monitored during the test to preclude unrealistic levels.
7. During the test the test article shall be operated in a mode representative of that during launch.

3.2.4 ALIGNMENT

The total worst case repeatable mechanical mounting alignment of the PPT with the spacecraft shall be less than 0.5 Deg. No provisions shall be made for making alignment adjustments. The alignment of the center of the PPT exhaust cones with respect to the holes will be measured to better than 0.5 Deg.

3.2.5 PPT HANDLING OPERATIONS

The PPT User's Manual defines the handling and installation procedures for the PPT. The PPT will be installed by the spacecraft contractor with support from PPT personnel. Normal care shall be exercised during handling and installation of the equipment. Protective covers shall be supplied by the PPT contractor.

3.2.6 ACCESS REQUIREMENTS

Access requirements to the PPT shall be defined in the PPT user's manual. Access requirements include connector mate/demate clearances, removal and replacement clearances for protective covers, and access to install and remove of GSE required for safe discharge of PPT.

3.2.7 THERMAL

The specific types of thermal control available to the technology provider are radiation to space, regulated conductive paths to the spacecraft and thermostatically controlled heaters. Temperature control of the PPT will be accomplished using selected thermal control coatings, multi-layer insulating (MLI) blankets, and regulating the heat flow between the PPT and the spacecraft structure. The PPT and spacecraft panel temperature limits are defined in Section 3.2.7.1 and the spacecraft provided thermal isolators are described in Section 3.2.7.2.

3.2.7.1 Thermal Interface

The maximum allowable heat flow from all sources is shown in Table 3.3 and the interface temperature limits during operational and non-operations modes are shown in Table 3.4. The optical surface properties of the PPT are shown in Figure 3.5. The attachment point between the PPT and the spacecraft shall be consistent with Table 3.3.

Table 3.3 Thermal Interface Heat Transfer and Temperature Requirements

Max. conducted Heat Flow from S/C to PPT	15 W
Max. conducted Heat Flow from PPT to S/C	10 W
Max. radiated Heat Flow from S/C to PPT	TBD
Max. radiated Heat Flow from PPT to S/C	TBD

Table 3.4 Temperature Limits

	Operational Mode Limits	**Survival Mode Limits**
S/C panel	0 to 40 Deg C.	- 10 to 50 Deg. C
PPT	-30 to 40 Deg C	- 55 Deg C..

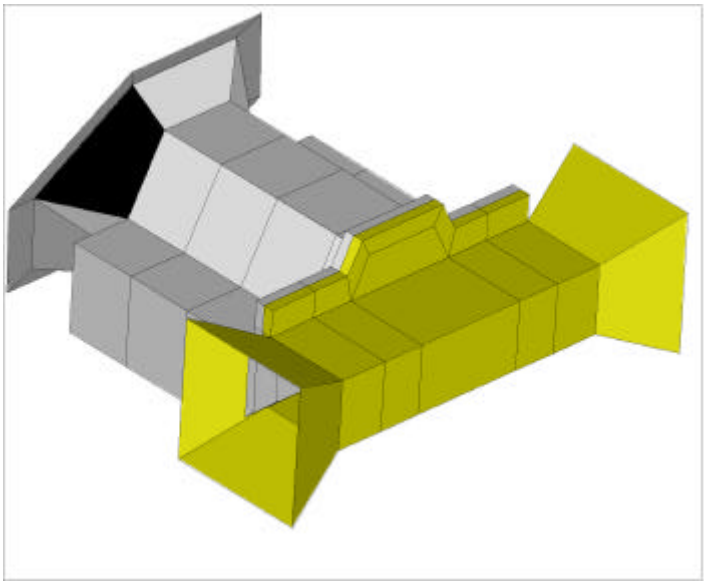

White Polyurethane: e = 0.9+/- 0.05, theta = 0.3+/- 0.04
Horn: e = TBD, theta = TBD

Figure 3.5 PPT Optical Properties

3.2.7.2 Thermal Isolators

The spacecraft shall provide two thermal isolators for each mounting bolt. The inner isolator between the spacecraft surface and the PPT flange shall be TBD thick with a TBD O.D. and a TBD I.D. The outer isolator between the bolt head and the PPT flange shall be TBD thick with a TBD O.D. and a TBD I.D.

3.2.7.3 Design Responsibility

The PPT vendor is responsible for the thermal design, thermal coatings application and testing of the PPT. The spacecraft contractor is responsible for the thermal analysis of the combined PPT and spacecraft. The technology provider shall provide a thermal model of the PPT to the spacecraft contractor. The PPT supplied thermal model shall include a maximum of 50 TRASYS surfaces and a maximum of 5 Sinda nodes.

3.3 ELECTRICAL INTERFACE

The spacecraft will provide the power, command, and telemetry to operate the PPT by means of electronics located in the PSE and ACE. The PPT will provide two harnesses, one for power and one for command and telemetry, from the PPT to the spacecraft. Mating of the harnesses will take place at the spacecraft bulkhead connectors shown in drawing A0759.

The PPT provider shall provide electrical schematics for power input and current limit circuits, command interfaces, telemetry interfaces, and temperature sensors interfaces.

3.3.1 POWER REQUIREMENTS

3.3.1.1 Description

The PPT power system block diagram is shown in Figure 3.6.

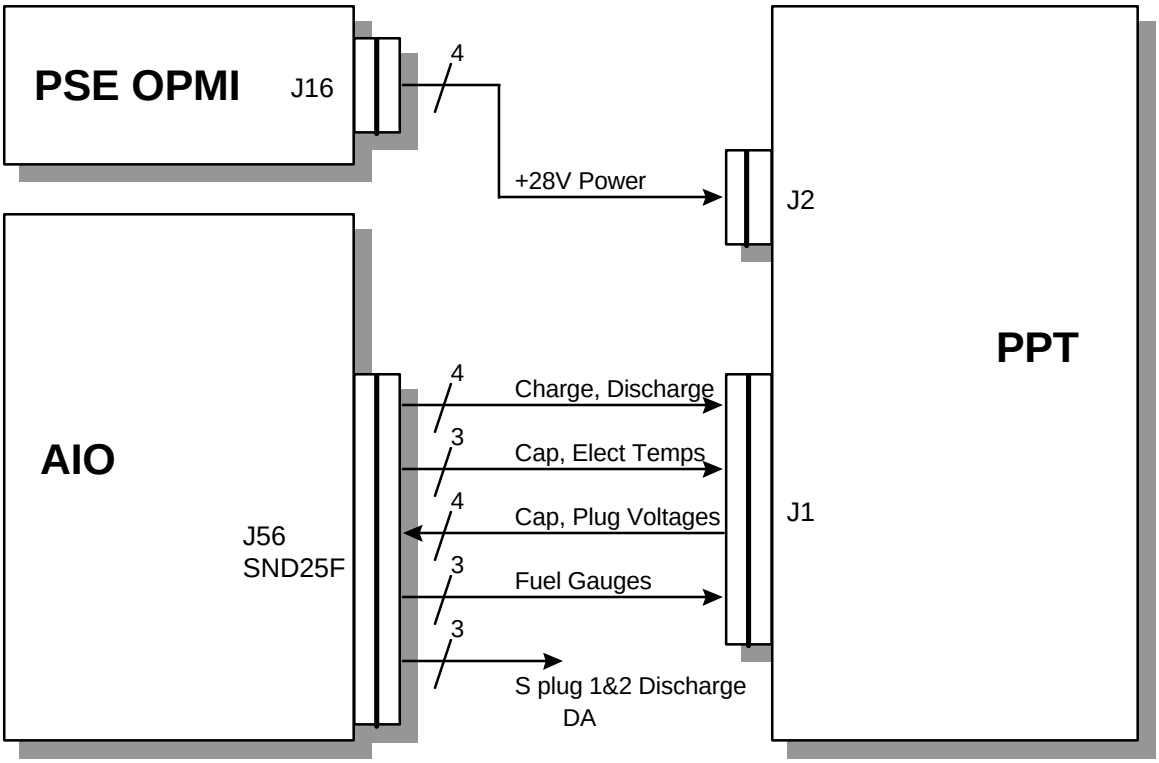

Figure 3.6 ACE PPT View

3.3.1.2 Power Characteristics

The spacecraft will supply the PPT with the voltage and power characteristics in Table 3.5.

The PPT provider shall ensure that the PPT shall successfully operate within this power regime.

Table 3.5

	PPT Power
Voltage Range	28 ± 6 V
Maximum Current	4 A

3.3.1.2.1 Transients, Ripples and Spike Performance, Output Impedance

The power transients due to load switching, the power transients due to fault conditions, the ripple and spike performance of the supplied power, and the output impedance are defined in System Level Electrical Requirements NMP EO-1 Flight, Litton Amecom document AM149-0020(155).

3.3.1.3 PPT Load Characteristics

The PPT's internal current limiting circuit shall be designed such that the main capacitor is charged to 54 J when a 920 msec charge command is sent with a maximum input voltage of 34V. The PPT shall be able to survive a voltage drop to zero for 20 sec. without damage to the PPT.

3.3.1.3.1 Power Distribution

The total PPT power allocations is given below. Nominal operation refers to the operation of the PPT for pitch attitude control during spacecraft nominal science model. Standby mode refers to mission phases in which the PPT is power on but no commands are being sent to the PPT. Survival mode refers to all phases of the mission in which the PPT is not operated or in the standby mode.

Nominal operation, orbit average	40 W
Standby mode	1 W

The current draw at maximum voltage is shown in the figure below.

(TBD)

Figure 3.7 Charging Current Profile

3.3.1.3.2 Nominal Operation Profile

The nominal operation load profile of the PPT is illustrated in Figure 3.8.

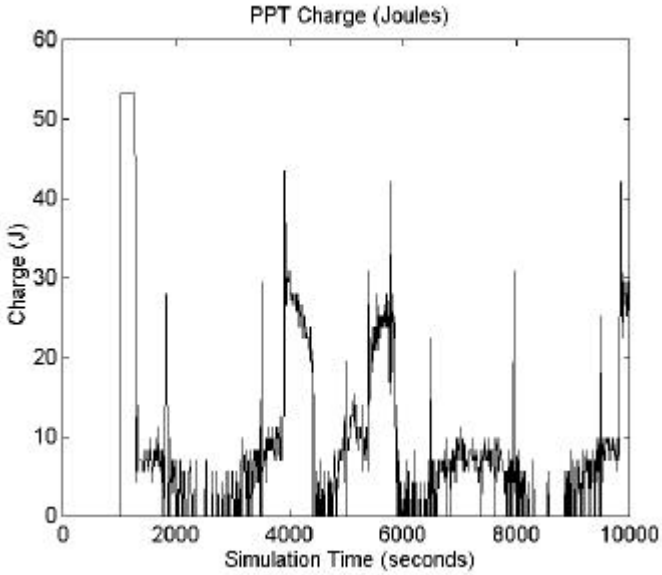

Figure 3.8

3.3.1.3.2 PPT Turn-On Transients

Refer to the PSE output turn-on transient definition in the System Level Electrical Requirements NMP EO-1 Flight, Litton Amecom document AM149-0020(155).

3.3.1.3.3 Turn-Off Transients, Operational Transients, and Reflected Ripple and Spikes

Refer to System Level Electrical Requirements NMP EO-1 Flight, Litton Amecom document AM149-0020(155).

3.3.2 COMMAND REQUIREMENTS

Command	Square Wave Signal	Duration	Max. Current
Capacitor Charge	+5 V, (-0.3 V to 1.8V) low (3.5 to 10V) high	100 to 920 msec	0.5 mA at 5V
Spark Plug 1 Discharge	+5 V (-0.3 V to 1.8V) low (3.5 to 10V) high	≥ 10 usec	2.5 mA at 5V
Spark Plug 2 Discharge	+5 V (-0.3 V to 1.8V) low (3.5 to 10V) high	≥ 10 usec	2.5 mA at 5V

3.3.2.1 Capacitor Charge

The PPT will charge the main capacitor for the length of time the capacitor charge signal is switched from a logic zero the logic high position.

3.3.2.2 Spark Plug Discharge

The spark plug discharge signals will discharge the appropriate spark plug and cause the PPT to fire. The leading edge of a high going pulse is used to fire the spark plugs within 3 usec of the pulse front. The up edge discharge signal should be sent to the PPT coincident with the down end of the capacitor charge signal to prevent capacitor bleed down.

3.3.3 TELEMETRY REQUIREMENTS

Additional details are in Section 3.5.1.

	Type of Signal	Voltage	Current
Capacitor Voltage	Analog voltage output from PPT with 1 KOhm impedance	0-5V	5mA at 5 V
Spark Plug 1 Voltage	Analog voltage output from PPT with 1 KOhm impedance	0-5V	5mA at 5 V
Spark Plug 2 Voltage	Analog voltage output from PPT with 1 KOhm impedance	0-5V	5mA at 5 V
Capacitor Temperature	Current source provide by S/C. Impedance as a function of temperature	--------	--------
Transformer Temperature	Current source provide by S/C. Impedance as a function of temperature	--------	--------
Fuel Gauge #1 Voltage	Current source provided by S/C. Impedance as a function of gauge position	--------	--------
Fuel Gauge #2 Voltage	Current source provided by S/C. Impedance as a function of gauge position	--------	--------

3.3.3.1 Voltage Telemetry

The PPT will provide the spacecraft with 0-5V analog signals which are proportional to the actual voltage on the capacitor and spark plugs 1 and 2. The signals are low impedance outputs and are limited to 6.2V by means of a zener diode.

3.3.3.2 Temperature Sensors

The temperature sensors will be YSI model #44906. The spacecraft will supply a current source to the sensors and measure the voltage to determine temperature.

3.3.3.3 Fuel Gauges

The fuel gauges are floating variable impedance devices (5 Kohms - 10 Kohms). The spacecraft will supply a current source to the gauges and measure the voltage to determine the fuel usage.

3.3.4 CONNECTORS, PIN ASSIGNMENTS and WIRE LIST

3.3.4.1 Connectors

The following connectors will be used with type M85049/17XXN03 EMI backshells:

Connector	Type
P1 PPT Harness (Power)	MS27484T10F35P
P1 S/C Bulkhead (Power)	MS27472T10F35S
P2 PPT Harness (Signal)	MS27484T12F35S
P2 S/C Bulkhead (Signal)	MS27472T12F35P

3.3.4.2 Connector Mounting

The spacecraft bulkhead connector locations are shown on drawing A0759.

3.3.4.3 Pin Assignment/Wiring List

Description	Signal Name	Signal Type	Source Brd-Conn-Pin	Destination Brd-Conn-Pin	AWG	Notes
+28V Power #1	PPT-28A	Pwr,+28V	PIO J85-1	PPT J1-1	22	2
+28V Power #1 Return	PPT_28A_RTN	Pwr, Return	PIO JJ85-2	PPT J1-6	22	
+28V Power #2	PPT-28B	Pwr,+28V	PIO J85-14	PPT J1-2	22	
+28V Power #2 Return	PPT_28B_RTN	Pwr, Return	PIO J85-15	PPT J1-7	22	
Capacitor Charge	PPT_CC	Dig, I bit	PIO J85-20	PPT J2-6	22	3
Spark Plug 1 Discharge	PPT_SP1D	Dig, I bit	PIO J85-8	PPT J2-1	22	3
Spark Plug 2 Discharge	PPT_SP2D	Dig, I bit	PIO J85-9	PPT J2-8	22	3
CCharge/PDischarge Return	PPT_CCPD_RTN	Dig, Return	PIO J85-21	PPT J2-5	22	
Capacitor Temperature	PPT_TEMPC	Thermister	PIO J85-4	PPT J2-12	22	4
Transformer Temperature	PPT_TEMPT	Thermister	PIO J85-5	PPT J2-10	22	4
PPT Temperature Return	PPT_TEMP_RTN	Ana, Return	PIO J85-17	PPT J2-11	22	
Capacitor Voltage	PPT_CAPV	Ana, 0 to +5V	PPT J2-4	PIO J85-23	22	5
Spark Plug #1 Voltage	PPT_SP1V	Ana, 0 to +5V	PPT J2-2	PIO J85-10	22	5
Spark Plug #2 Voltage	PPT_SP2V	Ana, 0 to +5V	PPT J2-7	PIO J85-11	22	5
Spark Cap/Plug 1&2 Return	PPT_CPV_RTN	Ana, Return	PPT J2-3	PIO J85-24	22	
Fuel Gauge 1 Voltage	PPT_FG1	15K Pot?	PIO J85-12	PPT J2-15	22	6
Fuel Gauge 2 Voltage	PPT_FG1	15K Pot?	PIO J85-13	PPT J2-13	22	6
Fuel 1&2 Voltage Return	PPT_FGV_RTN	15K Pot?	PIO J85-25	PPT J2-14	22	

Notes:
1) Thermostat control is inside the PPT.;
2) Power wires sized for 5A continuous through 22 AWG pairs
3) Digital command lines from PIO card to PPT share a common digital return line
4) Thermisters inside PPT hare common return for current source on PIO card.
5) Analog voltage telemetry lines from PPT to PIO card share a common analog return line
6) Potentiometers inside PPT share common return for current source on PIO card.

3.3.5 ELECTROMAGNETIC COMPATIBILITY

3.3.5.1 EMC Requirements

The following paragraphs address conducted and radiated emission and susceptibility levels. These requirements, which make up the core of the EMC specification, are drawn form MIL-STD-461C.

3.3.5.1.1 Conducted Emissions

The unit shall comply with the conducted emissions requirements found in section 3.2.8 of System Level Electrical Requirements NMP EO-1 Flight, Litton Amecom document AM149-0020(155) with the following exceptions TBD.

3.3.5.1.2 Conducted Susceptibility

The unit shall not exhibit any malfunction, degradation of performance, or deviation from specified indications beyond the tolerances specified herein when subjected to the following electromagnetic energy signals injected onto its dc power leads:

Ripple	2.8 V RMS or 40 watts at any frequency from 30 Hz to 50 KHz, 1 V RMS or 1 watt at any frequency from 50 KHz to 400 MHz
Transients	+28 or -28 volt zero-too-peak, 10usec width, at any repetition rate up too 300 Hz (50 ohm source)
Step voltages	+6 or -6 volt steps with 300 usec rise time (0 to 100%) at any repetition rate up to 20 Hz
Common mode voltages	-14 volt, zero-to-peak, 10 usec width, at any repetition rate up to 300Hz

3.3.5.1.3 Radiated Emissions

The unit shall comply with the radiated emissions requirements found in section 3.2.8 of System Level Electrical Requirements NMP EO-1 Flight, Litton Amecom document AM149-0020(155) with the following exceptions: TBD.

3.3.5.1.4 Radiated Susceptibility

The unit shall not exhibit any malfunction, degradation of performance, or deviation from specified indications beyond tolerances specified herein when subjected to the following radiated susceptibility requirements.

3.3.5.1.4.1 Electric Field

The limits are as tabulated:

Frequency Range	Field Intensity (V/m)
14 KHz to 2 GHz	2
2 to 3 GHz	20
3.6 to 8.6 GHz	2
8.6 to 9 GHz	50
9 to 18 GHz	2

3.3.5.1.4.2 Magnetic Field

The magnetic field intensity shall be consistent with nearby magnetic torquer bar activity in the 30-60 Am^2 range, within 0.25 meters.

3.3.5.2 Shielding

For harness shielding, shielding methods, and shielding termination and grounding requirements refer to the System Level Electrical Requirements NMP EO-1 Flight, Litton Amecom document AM149-0020(155).

3.3.5.3 Isolation

The main discharge capacitor and the electrode/stripline assemblies returns will be electrically isolated from the spacecraft with at least 300 Ohms DC impedance

3.3.6 MECHANICAL

The electrical requirements for mechanical bonding, bonding measurements, and chassis design shall conform to those requirements specified in the System Level Electrical Requirements NMP EO-1 Flight, Litton Amecom document AM149-0020(155).

3.4 ENVIRONMENTAL REQUIREMENTS

The PPT shall be design to survive and operate environments found in the EO-1 Verification Plan and Environmental Specification, SAI-SPEC-158.

3.4.1 RADIATION

The PPT shall be design to operate within specification in the environment specified in the EO-1 Mission Ionizing Radiation Specification - Attachment A.

3.4.2 SAFETY

The PPT presents no unusual safety hazards. The PPT presents only the safety hazards listed below:

ONLY IF 28V power is applied AND a command signal is given to charge the capacitor, potentially lethal voltages can be present on the electrodes, which are recessed in the horn assemblies and not easily accessible. Care must be exercised during periods in ground test during which 28 V is applied to the PPT.

3.4.3 CONTAMINATION

The PPT shall be fabrication and maintained in accordance with the contamination requirements specified in the EO-1 Contamination Control Plan, SAI-STD-138.

3.5 SOFTWARE INTERFACES

The spacecraft software will accommodate the command and telemetry requirements listed necessary to operate the PPT experiment.

3.5.1 TELEMETRY REQUIREMENTS

	Size	Rate	Source	Engineering Units	Range	Note
Capacitor Voltage	12 bits	5 Hz	PIO	Volts	TBD	1
Spark Plug #1 Voltage	12 bits	1 Hz	PIO	Volts	TBD	2
Spark Plug #2 Voltage	12 bits	1 Hz	PIO	Volts	TBD	2
Capacitor Temperature	12 bits	1 Hz	PIO	Deg C	TBD	
Electrode Temperature	12 bits	1 Hz	PIO	Deg C	TBD	
Fuel Gauge #1	12 bits	1 Hz	PIO	mm	TBD	
Fuel Gauge #2	12 bits	1 Hz	PIO	mm	TBD	
PPT Power	1 bit	1 Hz	PIO	On/Off	NA	
PIO Voltage	12 bits	1 Hz	PIO	Volts	0-40	
Required PPT pulse	12 bit	1 Hz	ACS	#1/#2 sec	TBD	
Commanded PPT charge time	12 bit	1 Hz	ACS	#1/#2 sec	TBD	
Discharge Spark Plug #1 command		1 Hz	ACS			
Discharge Spark Plug #2 command		1 Hz	ACS			
Total # of Spark Plug # 1 discharges		1 Hz	ACS			
Total # of Spark Plug #2 discharges		1 Hz	ACS			
Cumulative charge time	12 bit	2 Hz	ACS	sec	TBD	

Notes:
1) The spacecraft will capture the capacitor voltage during the charge interval immediate prior to the fire command and immediately after the discharge command.
2) The spacecraft will capture the sparkplug voltage during the charge interval immediately prior to fire command.

3.5.2 GROUND COMMANDS

The spacecraft will provide the capability of receiving the following ground commands:

Command	Destination	Comments
Power PPT ON	TBD	
Power PPT OFF	TBD	
Charge capacitor for xxx sec. and discharge spark plug #1	PIO	xxx is restricted to values between (TBD-TBD)
Charge capacitor for xxx sec. and discharge spark plug #2	PIO	xxx is restricted to values between (TBD-TBD)
Enable PPT control mode	ACS	
Disable PPT control mode	ACS	

3.5.3 ACS

The EO-1 flight ACS software will incorporate the logic and associated processing functions to allow the PPT be used as a pitch attitude control device.

4.0 GSE

The PPT provider will supply the following GSE:

a. A device for connecting for electrodes to allow for safe discharge of PPT in ambient conditions and protect the electrodes during I&T

b. Handling fixtures/transportation box and electrical breakout boxes if required

c. Electrical breakout box to connect each of the two PPT connectors to the spacecraft bulkhead connectors

The spacecraft integrator will provide electrical GSE capable of commanding and performing C&DH functional tests of the PPT during I&T.

5.0 DELIVERABLES LIST

The PPT supplier will provide the following items to the spacecraft vendor.

1. Flight PPT Unit
2. Two electrode shorting plugs to enable safe discharge of PPT in ambient conditions
3. Two Electrode covers
4. Each of the two spacecraft bulkhead connectors with backshells
5. A break out box for each of the two PPT connectors
6. Connector savers for the PPT and spacecraft bulkhead connectors

7. Connector caps for the PPT and spacecraft bulkhead connectors
8. A transportation box/handling fixture for the PPT
9. PPT Users Manual
10. Acceptance Test Data Package
11. Mechanical Analysis Package
12. Thermal Model and Analysis Package

The spacecraft vendor will deliver the following items to the PPT supplier:

1. Four flight thermistors
2. All Reference and Applicable documents specified in the ICD.

6.0 PPT PERFORMANCE

The PPT shall be designed to deliver the following performance on orbit.

6.1 IMPULSE BITS

The nominal impulse-bit produced by the PPT as a function of commanded charge time for an input voltage of 28V is given in Figure 6.1. The actual impulse bit produced by the PPT will be within +/-15% of the nominal range for all input voltages. The PPT will provide acceptance date as validation of the PPT's impulse bit performance.

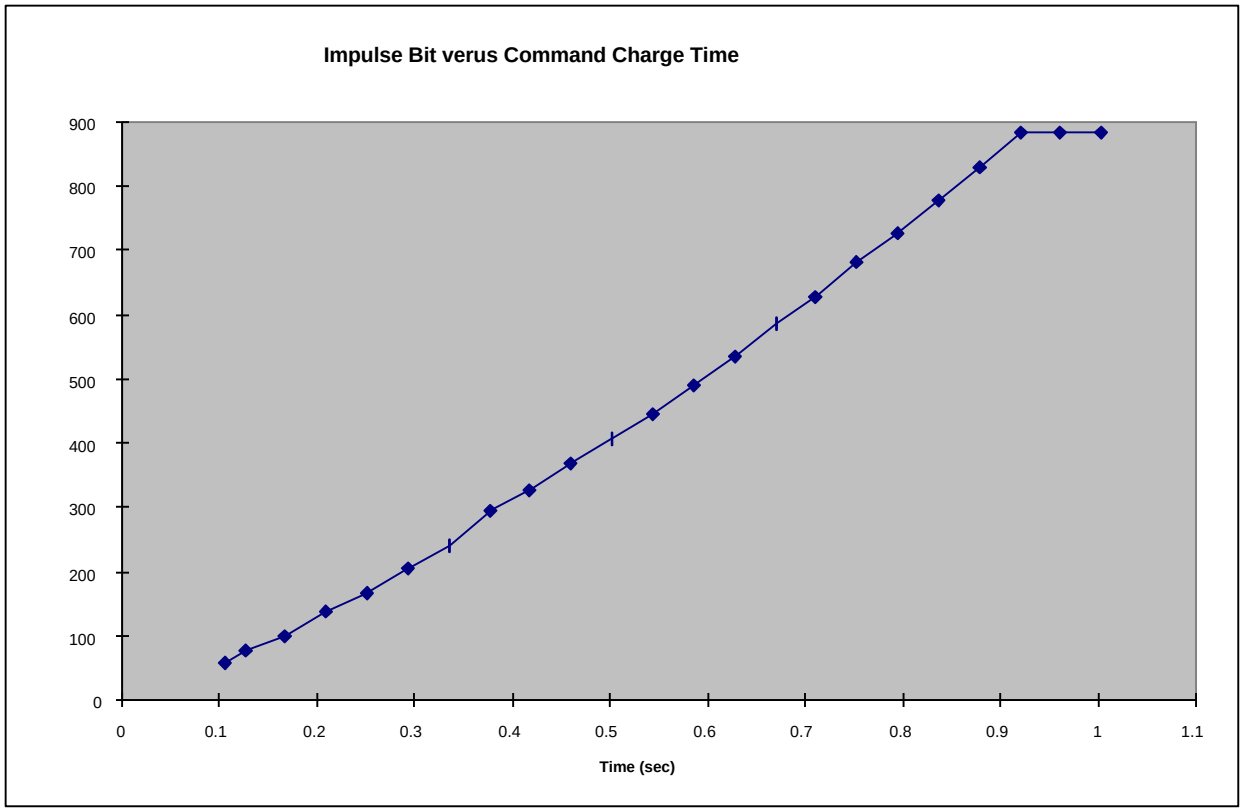

Figure 6.1

6.2 THRUST VECTOR

The thrust vector of the PPT shall be within TBD Deg of the geometric center of the horn assemblies

6.3 OPERATIONAL CONSTRAINTS

The command charge time of the PPT will not be greater than 920 msec and will not be less than 50 msec. The PPT will not be command to fire more than once every 1 Hz cycle.

6.4 TOTAL IMPULSE

The total impulse capability of from each of the PPT electrodes will be at least TBD Nsec